GSM & WiFi Alarm System

User Manual

WIFI+GSM+GPRS

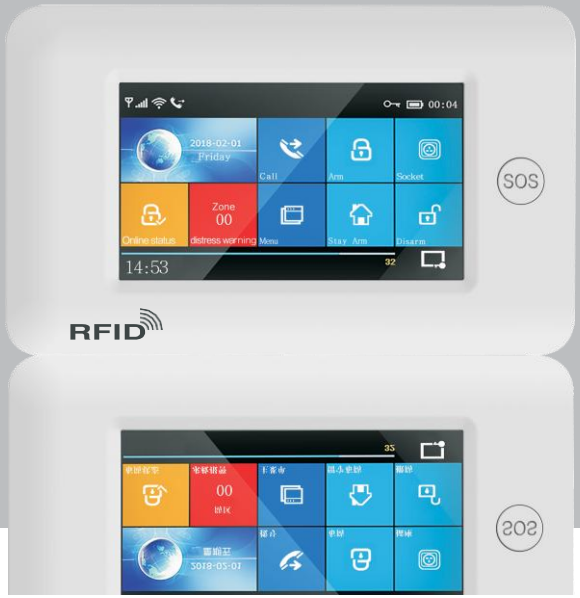

Content

OVERVIEW 1~2

Explanation 1
Features 1
Glossary 2

APPEARANCE AND ACCESSORIES 3~7

Front 3
Host back parts bottom view 3
Side 4
Power on/off & initialization button 4
SOS button 4
SOS button backlight 4
Navigating Menus 4
Main interface function and button description 5
Menu function icon/button 6~7

DISASSEMBLY 8

Start operation 8
System initialization 8
Menu operation 8
Add alarm phone numbers 8
Match code with/delete remote-controllers 9
Match code with/delete wireless detectors 9
Match code with/delete RFID tag 10
Match code with wireless siren 10
Wireless alarm linkage 10
Smart home appliance 11
Message recording and playback 12
Time arm/disarm 12

MOBILE APP 12

REMOTE SMS 13~15

Set parameters by SMS 13
Set control panel's name by SMS 14
Set zones' name by SMS 14
Query parameters by SMS 14~15

PHONE FUNCTION 16

DAILY OPERATION 16~17

Out arm 16
Stay arm 16
Disarm 17
SOS 17
Confirm the operation result by SMS 17

ALARM & REMOTE MONITORING 18~19

SMS alarm 18
Voice alarm & remote monitoring 18
Mobile app alarm recieving procedure 18
Networking alarm recieving procedure 19

TECHNICAL PARAMETER 19

PACKING LIST 19

OVERVIEW

Instruction

- Items with WiFi illustrated in the user manual, only be valid for the host which matched with the wifi module.
- Item with the ,only used for the customers which have the networking alarm centers and open the service with the alarm center.

Features

- 4.3"TFT color full touching screen, used the simple style human computer interface
- Main interface status, State magnetic paste, date and time display, main interface clearly.
- Built-in powerful CPU master based on 32-bit Cortex-M3 core. Muti-
- tasking design, great user operation practice.
- Wifi/GSM/GPRS networking alarm system, support mobile app, SMS, invoice monitoring, alarm center and other multi channel alarm module, make the alarm function stable.
- Support SMS arm/Disarm and parameters setting, support invoice arm/Disarm.
- Support main gate, hall, SOS, bedroom, window, balcony, perimeter, smoke. Cooking gas, CO gas, leak water and other zone setting.
- Support the alarm such as battery problem, low power battery anti-pry alarm etc.
- Support low power for wireless parts, Tamper alarm function.
- Door/window not closed notice while armed.
- Support in/out zone, internal zone, peripheral zone, 24 hours zone, doorbell and other zone setting.
- Support 5 groups alarm phone number setting, can set the SMS open/close, dialing open/close respectively.
- External wired alarm connectors: 1 channel external wireless siren, 1 channel alarm linked wireless intelligent socket.
- APP or host can control several socket, so control the home electrical appliances.
- Timed arm/disarm function.
- Support multi record storing/searching for daily operation
- GSM/WiFi network time correcting automatically, ensure the time and date keep correct, support multi language menu, invoice operation notice and SMS alarm setting.
- Support 20 seconds message and invoice alarm.
- Telephone number function. Support 5 groups number redialing.
- Excellent APP operation feeling and user interface, get the device working status anytime.
- Arm/disarm, host alarm to mobile app.
- Support APP arm/disarm remotely, parameter setting, Parts management and intelligent socket control.

- GPRS networking real-time, get the latest working status anytime, alarm automatically while offline.
- Reserved remote GPRS TCP/UDP protocol channel, it can be compatible with several alarm center networking protocol.
- Center remote control.

Glossary

- **Arm:** arrange the security surveillance assignment(Burglar against),make the host get in the warning status, also called defenses setting up, warning or start operation.
- **Stay Arm:** when users at home, only need to defensing at the main entrances and the perimeter, also called home alarm.
- **Disarm:** cancel the security surveillance assignment (Burglar against), also called defenses canceling or operation power off.
- **Zone triggering:** at the arm status, when the detectors detected the human body or the triggers made by door opened, then caused the warning assignment.
- **Log off delay:** when the host armed, in order to avoid the alarm made by the user left the arm zones, need to set the delay time, also called arm delay.
- **Enter the delay:** when user come back and triggered the detectors, host will not alarm immediately, give some time for the user to cancel the arm, only alarm if over time, also called alarm delay.
- **Alarm:** when the host have the alarm assignment, it will cause the strobe alarm locally, then send the SMS alarm to the mobile defaulted, dial the mobile defaulted, push the alarm to the mobile app and send the messenger to the networking alarm center etc.

Appearance and accessories

Front

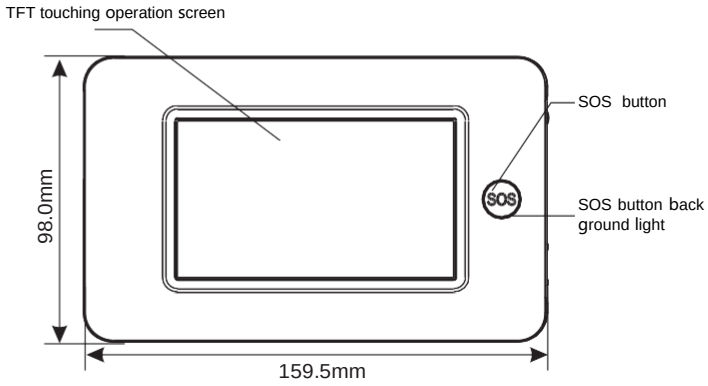

Host back parts bottom view

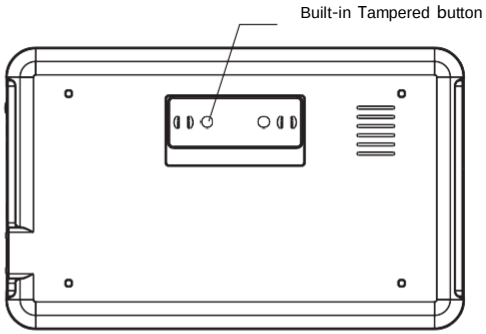

Side

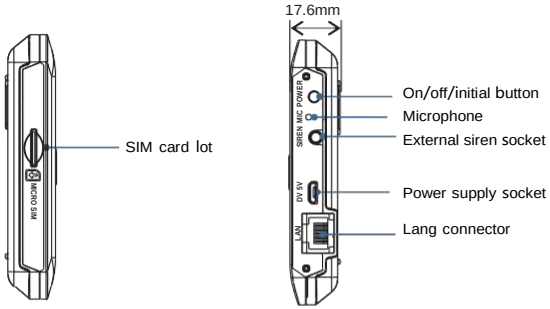

Power on/off & initialization button

Function	Method
Power on	Push this button, it will show "welcome"means power on successfully
Power off	Push this button for 3 seconds till the screen become black, means power off successfully
Initialization	Push 5 times, the host will restart means initial successfully (don't operated when the screen locked)

SOS button

Push this button when emergency, it will cause the strobe alarm locally, then send the SMS alarm to the mobile defaulted, dial the mobile defaulted, push the alarm to the mobile app and send the messenger to the networking alarm center etc.

SOS button backlight

Back ground light	Status
Circulate twinkle	Alarm
Breathing twinkle	Arm
Normally on	Disarm

Navigating Menus

Main interface function and button description

Top status bar	1	4	GSM Status indication		No SIM card or wrong inserting	
					GPRS networking status indication	
					GSM networking strength indication	
					No networking if gray color, 1~5 meant the strength level	
		5	WIFI wireless		1~4 means the wifi strength level Gray color means no wifi	
					Device already connected with the cloud,White dot at the right bottom corner means the binding mobile is online	
		6	GSM assign status		SMS sending	
					Telephone/mobile dialing	
		7	Keyboard locked		Keyboard locked status,5seconds countdown before locked	
		8	Power status		Main power supply	
					Spare power supply,0~3 shows the power capacity	
		9	Clock	00:07	Current time	
Main status zone	2	10			Current date and week	
		11	Dial Call button		Push and dial the telephone number	
		16	Menu button		Push and enter into the menu setting	
		12	Arm button		Push and enter into the arm system	
		13	Socket button		Push and control the intelligent socket	
		17	Stat Arm button		Push and enter into stay arm	
		18	Disarm button		Push and enter into disarm	
		14	Arm/Disarm Lo button		Push and searching the arm/disarm history	
			Arm/Disarm status		Arm status	
					Stay arm status	
					Disarm status	
		15	Alarm Log button		Push can searching the alarm history	
			Alarm status		No alarm	
					Alarm status,will show the zone number if thezone alarm	
Bottom status bar	3	00:07			Current time	
		"Please exit" Countdown bar			Exit the delay status Enter into the countdown status when arm finished Will get tin the arm status when the countdown finished	
		"Please disarm" Countdown bar			Enter into the delay status Need to be the count down status when get to the arm status, if no disarm, device will be triggered and alarm	
		"Synchronizing" Countdown bar			Learning accessory state Please trigger the parts before count down	
		Screen close button			Push and enter into black screen	

Menu function icon/button

Main menu	System settings	Delay setting	Exit Delay	Set the exit delay value, please refer to the daily operation words
				Unit: seconds; scope: 0~65535; default: 40 seconds
			Enter Delay	Set the enter delay value, please refer to the daily operation words
				Unit: seconds; scope: 0~65535; default: 40 seconds
			Siren Duration	Set the siren duration time while alarming
				Unit: minutes; scope: 0~65535; default: 3 minutes
		Switch setting	Arm Beep	Set the arm beep for external siren while arm/disarm
				scope: on/off, default: off
			Siren notice	Set the siren notice for external siren while arm/disarm
				scope: on/off, default: off
			Arm SMS	Arm notice while setting the Arm/disarm
				scope: yes/no, default: no
			Keypad Lock	Keypad locked setting
				scope: yes/no, default: no
			keyboard Backlight	Keyboard backlight setting
				scope: on/off, default: off
			Keypad Tone	Keypad Tone setting
				scope: on/off, default: off
			Delay Tick	Delay Tick notice while in/out setting
				scope: on/off, default: on
		Password setting	System password	System password setting
				Scope: 0000~9999; scope: 6666
			User password	User password setting
				Scope: 0000~9999; default: 1234
		multi-Language setting	简体中文	Host language: simple Chinese
			English	Host language: English
			Deutsch	Host Language: Deutsch
			РУССКИЙ	Host language: Russia
			Espa?ol	Host Language: Spanish
			Polski	Host language: Polish
			Italiano	Host language: Italy
			Fran?ais	Host language: French
			Português	Host Language: Portuguese
		Initialization	System Initialization, Function & describe as: System Initialization	

Main menu	Phone management	1st Phone	Group 1 alarm phone number & dial Switch, SMS switch	See as: Phone Number setting
		2nd Phone	Group 2 alarm phone number & dial Switch, SMS switch	
		3rd Phone	Group 3 alarm phone number & dial Switch, SMS switch	
		4th Phone	Group 4 alarm phone number & dial Switch, SMS switch	
		5th Phone	Group 5 alarm phone number & dial Switch, SMS switch	
	Log searching	Alarm Log	Alarm log & Event record	
		Arm Log	Alarm/disarm log searching	
	Parts	Remote controller	Add/delete remote controller	See as: Remote controller add/delete
		Detector	Add/delete wireless detector	See as: Wireless detector add/delete
		RFID	Add/delete RFID card	See as: RFID card add/delete
		Siren Learn	External wireless siren Airlink	See as External wireless siren matching
		Alarm Socket	Alarm linkage intelligent socket Airlink	
		Socket Timer	Intelligent socket timer on/off setting	
	Wi-Fi setting	Airlink	Host get into WIFI wireless networking airlink status (need to matching mobile APP)	See as Mobile APP with the host airlink & unbind
		Unbind	Unbind the mobile app with the host	
		MAC/IP	Get the Wi-Fi MAC&IP address	
	Record	Record/playback	Record and playback	See as: Record management
		Play	Play the current record	
		Delete	Delete the current record	
		Duration	Set the record Duration	scope: 1~20 second; Default: 20
	Timer	Arm Timer	Arm timer time & on/off setting	See as: Arm/disarm Timer
		Disarm Timer	Disarm timer time & on/off setting	
		Zone&Sync	Set the time difference between the local time with the Greenwich time	
		Date&Time	Host time manual setting	
		Wi-Fi Sync	Set if the time sync with the Wi-Fi	Scope:on/off; default:on
		2G/3G Sync	Set if the time sync with the 2G/3G network	Scope:on/off; default:on
	Version	Search the Wi-Fi firmware、MAC address、2G/3G firmware、2G/3G module IMEI number、host firmware、host serial number		

1. Keyboard lock open: at the main interface, no pushing with 30 seconds or push directly, host locked, user need to enter the password for further more operation.

2. keyboard backlight closed: at the main interface, no pushing with 30 seconds or push directly, host backlight will be closed to save the power.

3. After choose one language, the operation notice, display, SMS message will switch to the same language, host will restart while finished.

Disassembly

Start operation

- Insert SIM card: as the direction of the below picture, insert the standard to MICRO SIM SIM card lot,(need to be cut if big SIM card),when hear the “ticktack” sounds, means the card be ready。

- Power on: Insert the power supply with the USB 5V , Make the host power on.
- Start the host: Push the on/off button while the host is closed, succeed while the screen showed “welcome:
- Power off: Push the on/off button about 3 seconds while the working status till the screen become black, means successfully.

System initialization

Press the on/off button for 5 times, host will restart means the system initialization successfully, all the parameter set recover to factory setting, will delete all the learned remote controllers, sensors, RFIDs, all the record, languages and time zone will be recovered to factory setting too. network IP address also be deleted, the GPRS of the host will be dropped line, need to send SMS and reset the IP if want to be online.

Be cautious of this function, only be used while the password forgot, the host works normally, parameter set disorder or the unknown detectors, remote controller or RFID be learned. This operation is no use while the keypad be locked.

Menu operation

This item is based on Resistance touch screen design, use the press induction to push the screen button for operation.
Function do not described in this Part, please refer the details for menu function button.
Function described in this part: include the phone number setting, remote controller add/delete, wireless detector add/delete and the external wireless siren matching can be set by mobile app.(only with)

Add alarm phone numbers

5 alarm phone number can be set, each number can be set with the independent dial switch and SMS switch.

For example to set the Alarm No. 1:

- Press: Main menuPhone number managementalarm 1 Phone, enter alarm phone No.1 interface setting.
- Press enter& edit the alarm number(not more than 18 digits).

- Press and choose if open the dial function or not, if choose the ”on”,it will dial this number while alarm happens.
- Press and choose if open the SMS function or not, if choose the “on”it will send message to this number while alarm happens.
- Press and confirm, host will note” Setting OK” .

Match code with/delete remote-controllers

- Push: Main menu Parts Remote controller, enter the interface for remote controller setting.
- Push or for page down, it will show all the Synchronized remote controller

Sync the new remote controller

- Press host will show ”Synchronizing”,and get into the dialogue box for 20 seconds cut down of the remote controller launching.
- Press any button of the remote controller and send the signal to the host.
- Host shows”Learning OK”,means the remote controller Sync correctly, it will list for all the synchronized remote controller IP address.
- If the host shows”Device code has been learned”,means the remote controller code have been learned or the other learned detector code have been repeated, please change the remote controller.

Delete

- Press the remote controller listed, delete the chosen remote controller.
- Press ,delete all the remote controller.

Match code with/delete wireless detectors

- Press: Main menu Parts Detector, enter into the detector setting interface.
- Pressor page down, it will list all the Synced wireless detectors.

Sync the new wireless detectors

- Press , host get into the”Set Name/Mode/Number”interface.
- Press , choose the name of the zone for the none Sync wireless detectors.
- Press , choose the type of the zone for the none Sync wireless detectors.
- Choose “Stay Arm Active”,after the arm or stay arm setting, the detectors in this zones will alarm while be triggered. Front Door、Window、Balcony、Perimeter use this kind of detectors.
  Choose “Out Arm Active” , after the stay arm setting, the detectors in this zones will not alarm while be triggered. Living Room、Bedroom and other internal place use this kind of detectors.
  Choose “24 Hours Active” , it will alarm while be triggered anytime, SOS Panic、Smoke/Fire、Gas、CO、water Leakage use this kind of detectors.
  Choose “Close” , it will not alarm while triggered.
  For wireless doorbell, please choose “Doorbell” , It will note “dingdong” anytime while be triggered.

- Press ,enter & edit the zone code of the none Sync wireless detectors, please do not be repeated with the code of the other zones.
- Press ✓ ,host will show"Synchronizing", and will get into the dialogue box for 20 seconds cut down of the wireless detectors.
- Trigger the wireless detectors and send signals to the host.
- When host shows"Learning OK", means the detectors Sync successfully, it will list all the name of the detectors, type, code and address code.
  If host shows"Device code has been learned",means the detectors have been learned or repeated with the code of the other learned remote controller, need to be changed.

Delete

- Press the listed detectors ,delete the chosen detectors.
- Press ⊗ ,delete all the detectors.

Match code with/delete RFID tag

- Press:Main menu → Parts → RFID card,enter the interface of the RFID setting.
- Pressor page down, it will listed all the Synced RFID card.

Sync the new RFID card

- Press ⊕ host will show"Synchronizing",will get into the dialogue box for 20 seconds cunt down of the RFID card.
- Put the RFID card close to the induction zone.
- Host shows"Learning OK",RFID Sync succeed, it will list the card number which synced successfully.
  If host shows"Device code has been learnt",it means the RFID card code have been learned.

Delete

- Press the listed RFID card number ,delete the relevant RFID card.
- Press ⊗ ,delete all the RFID card.

Match code with wireless siren

This operation used to Sync with the wireless strobe siren.

- Press:Main menu → Parts,enter into parts setting interface.
- Press the"SET"button of the wireless siren, hear the sound 2 times, loose off, siren led flashed means synced successfully.
- Press the siren syncing button, host will note"Learn Signal Sent"send the wireless signal to the siren.
- Siren make the one long sound and one short sound notice, means the syncing succeed.

Wireless siren synced with the host, the siren will alarm while the alarm happened on the host.

Wireless alarm linkage

Sync with alarm linkage intelligent socket

- Press:Main menu → Parts → alarm linkage intelligent Alarm Socket,and enter into the alarm linkage intelligent socket setting interface.
- Operate the none sync wireless intelligent socket get into syncing status.(see as the intelligent socket user manual).
- Press"on" and"Off" in turns,host send the wireless signal to the intelligent socket.
- Intelligent socket led flashed means the syncing succeed, then operate log off the syncing status(see the user manual of the intelligent socket).
- Press switch"on"or"Off",can set alarm linkage function open or not.

Press or , check if it can control the intelligent socket, used to check if the intelligent socket sync with the host successfully or not.
If the alarm linkage function set as "on", while the host alarmed, the synced socket will open automatically, when host disarmed or the alarm sound finished, the socket will closed.

Smart home appliance

Full sockets

Interface press:press Socket,enter into the intelligent socket controlling interface.

Syncing

The syncing method between the host with the socket, please refer to the"alarm linkage intelligent socket syncing"one host can sync with several socket.
press"On" or" Off" host will have the on/off signal to control the wireless socket.

socket which synced the host succeed, can used the host or the mobile app to control on/off, or can do timer control for the socket.

Socket Timer

Host can several groups timer used to open/close the intelligent socket timed. Each group can set the socket number, time, time on/off etc.
Press:Main menuPartsSocket Timer,enter into the intelligent socket timer interface.

Add the timer

- Press , enter into the socket timer setting interface.
- Press + or - in ,set the socket number.
- Press + or - in ,adjust the timer time.
- Press the week item in , set the day of the week.
- Press choose timer on or off.
- Press , finish the setting.

Edit

Press the serial number front of the Timer, can edit the relevant timer, same as the above.

Delete

Press behind of the timer list,delete the relevant timer.
Press ,delete all the Timer.

Message recording and playback

Alarm record

You can record in the host for 20 seconds, when alarm happened, host will dial the default numbers and playback this record.

- Press:Main menu → Record → Record & playback.
- Host shows the dialogue box " Busy and waiting please", when changed to" Recording" record starting cut down.
- User speak toward the host, the record words need be simple, such as" This XXX's home, have been intruded, please give help".
- When record finished, hot will show"Playing"and playback automatically. After the playback finished, press ✓, will note"Please wait saving". When host shows"Operation OK", record succeed.

Time arm/disarm

User can use their time table, to set the time auto arm and time auto disarm, avoid to repeat daily or forgot the operation.

Arm Timer

Press: Main menu Timer Arm Timer.

- Press and ,adjust the timer arm time.
- Press + , choose" On" .
- Press ■, finish the setting.
- ✓

Disarm Timer

Press:Main menu Timer Disarm Timer.

- Press and ,adjust the time of the disarm timer.
- Press + , choose "on "or" Off" .
- Press ■, finish the setting.
- ✓

Mobile app

WiFi

Please refer to attachment

Remote sms

Set parameters by SMS

User only need to edit the SMS as below format, and send to the host SIM card number to finish the setting.

*	System password	*	Address setting	Content setting	*	Address setting	Content setting	*

One SMS can be include one or several address and content, but need to be separated by*,the head and the end must be*,each address should be 2 digits, otherwise it may have the unexpected result, each SMS must be less than 160 bytes, we suggest to finish all the contents in one SMS.

address	function	Content & scope	Factory setting
35	Redial times while dial failure	1~255 times	1 time
36	bell ring times while auto receiving	1~255 times	1 time (in future)
38	username password correct	0000~9999must be 4 digits	1234
39	System password correct	0000~9999must be 4 digits	6666
43	parameter initialization	see note 1	
51	alarm phone 1st setting	See note 2	closed
52	alarm phone 2nd setting	See note 2	closed
53	alarm phone 3rd setting	See note 2	closed
54	alarm phone 4th setting	See note 2	closed
55	alarm phone 5th setting	See note 2	closed
62	Search the GSM field strength	empty	
90	Set the GPRS sever IP address	this setting only be valid while the GPRS online, see note 3	empty
92	Set the GPRS APN	this setting only be valid while the GPRS online, see note 4	CMNET
93	Set domain name of the network time sever		us.ntp.org.cn
94	Set the time difference with the standard Greenwich time		+8

Setting comment(all the example used the default system password:6666) :

1、Parameter initialization:keep the learned remote controller, wireless detectors and RFID cards, others recovery to factory setting.
Set the SMS content as: *6666*43* .

2、Alarm phone number setting format: xxxxxxxxxxx,A,B

Such as: xxxxxxxxxxx is the phone number(no more than 18 digits),A: alarm voice dial switch(1-on,0-off),B: SMS alarm switch(1-on,0-off).

For Example:

Set 2 alarm phone number, the one 13912345678used to receive the voice dialing and SMS,the one 075581234567only used to receive the voice dialing,then the SMS content should be: *6666*5113912345678,1,1*52075581234567,1,0* .

3、IP address setting format should be: aaa,bbb,ccc,ddd,xxxxx

Such:as,aaa,bbb,ccc,ddd is the IP address,xxxxx is the port number,use the comma to separate for each address.

For example:

Set the GPRS network sever IP address is 116.62.42.223,port number is 2001, then the SMS content setting should be: *6666*90116,62,42,223,2001*.

4、Set the local GSM operator GPRS access point APN

For example:

Local GSM operator GPRS access point APN is internet.beeline.kz, then the SMS content setting should be: *6666*92internet.beeline.kz*.

Set control panel's name by SMS

Set one name to the host,used for the prefix for the alarm SMS, so to distinguish the position for each alarm host.

SMS setting format: 1234@XXestate X building, 1234 is the user password,@is the commend words, "XX estate a building" is the content name(no more than 40 digits).

Set zones' name by SMS

Set the name of each zones, used to distinguish each zones when alarm happened.

SMS setting format: 1234@XX@bedroom ,1234 is the user password,@ is the commend digit, XX is the zone code (scope00~99) , "bed room"is the name want to set (no more than 20 digits) .

Query parameters by SMS

Alarm record

SMS format : *6666*62* ,host echo :

SYSTEM set:	
SN:	Host serial number
LANGUAGE:	Host language
ENGINEER PASSWORD:	Engineer password
USER PASSWORD:	User password
GSM CSQ:	GSM field strength value(0 or 99means the signal unusual)
WIFI RSSI:	WIFI field strength value

Searching system 2

SMS format : *6666*90* ,host echo :

SYSTEM set2:	
APN:	Name of the GPRS access point
GPRS IP:	GPRS network IP sever & client number
NTP:	Network time sever domain name
TIME ZONE:	GMT standard time
SERVER:	Sever

Alarm phone number searching setting

SMS format : *6666*51* ,host echo :

PHONE set:	
1:	1st alarm phone number, voice switch, SMS switch, general switch
2:	2nd alarm phone number, voice switch, SMS switch, general switch
3:	3rd alarm phone number, voice switch, SMS switch, general switch
4:	4th alarm phone number, voice switch, SMS switch, general switch
5:	5th alarm phone number, voice switch, SMS switch, general switch
REDIAL COUNTER: voice alarm redial counters	

Delay searching setting

SMS format : *6666*33* ,host echo :

DELAY set:	
ENTRY:	delay entering(unit: second)
EXIT:	delay quit(unit: second)
SIREN:	alarming time(unit: minutes)

Searching switch setting

SMS format : *6666*46* ,host echo :

SWITCH set:	
ARM/DISARM BEEP:	arm/disarm Beep switch(1 : on , 0 : off)
ALARM BEEP:	alarm beep switch(1 : on , 0 : off)
ARM/DISARM SMS:	arm/disarm SMS switch(1 : on , 0 : off)

Learned remote controller & detector quantities

SMS format : *6666*26* ,host echo :

DETECTOR learned:	
REMOTE:	learned remote controller quantities
DETECTOR:	learned detectors quantities
RFID:	learned RFID card quantities

Phone function

Push in the main interface, enter into the phone number dialing interface.
Push to look over the dialed phone number.

for below status, phone call will be forbidden:GSM network abnormal, aram/disarm, phone alarm be in progress.

Daily operation

Users can operate alarm host by any ways as below:
Remote controller , keyboards , RFID cards .

- Remote SMS
- Mobile phone APP
- GPRS alarm center

Out arm

By remote control: press 【 】key to trigger “Out Arm”.

By keyboard: In Main Interface, press 【 】to trigger Out Arm.
By RFID tag: In disarm mode, put the RFID card close to the sensitive area on bottom right corner of the alarm host.
By remote SMS: Send SMS message 1234#1 (1234 is user password),the alarm host will send “System Armed!” SMS to mobile phone to confirm.

By APP: In Main Menu, select “ 【 】”icon, the operation for “ Arm” is completed.
The alarm host reminder: A reminding voice “System armed” will be heard, the Main Interface displays “Armed” and “Please exit”, and an exit time progress bar appears. The user should leave the alarm zone before exit time. If Arm/Disarm SMS switch is on,the preset phone will receive SMS of “Sytem Armed!”.

In Out Arm mode,all defense zones are on alert statues.If there is any defense zones is been triggered,the alarm host will generate sound alarm.Meanwhile,alarm host send alarm SMS and make calling to preset phone number,and push alarm information to APP/GPRS alarm center.If alarm host learned alarming leakage smart plug,the plug will switch on when alarming.

Stay arm

By remote control: press 【 】key to trigger “Stay Arm”.

By keyboard: In Main Interface, press【 】to trigger “Stay Arm”.
By remote SMS: Send SMS message 1234#3 (1234 is user password), the alarm host will send“System Stay Armed!” SMS to mobile phone to confirm.
By APP: In Main Menu, select “ Stay Arm” icon, the operation for “Stay Arm” is completed.
The alarm host reminder: A reminding voice “System armed” will be heard, the Main Interface displays “Stay Armed”. If Arm/Disarm SMS switch is on,the preset phone will receive SMS “System Stay Armed! “.

In Stay Arm mode, only valid Stay Arm defense zones are on alert status. If any defense zones is been triggered, the alarm host will generate sound alarm, Meanwhile, alarm host send alarm SMS and make calling to preset phone number, and push alarm information to APP/GPRS alarm center. If alarm host learned alarming. leakage smart plug, the plug will switch on when alarming.

Disarm

By remote control: press 【 】button to trigger “Disarm”.
By keyboard: press on main interface .

By RFID tag：in out arm/stay arm mode,put the RFID card close to the sensitive area on bottom right corner of the alarm host.

By SMS：Send SMS message 1234#2 (1234 is user password), the alarm host will send “System Disarmed!” SMS to mobile phone to confirm.

By APP：In Main Menu, select “ Disarm” icon, the operation for “Disarm” is completed.

The alarm host reminder: A reminding voice “System Disarmed” will be heard, the Main Interface displays “Disarmed”. If Arm/Disarm SMS switch is on,the preset phone will receive SMS “System Disarmed!”.

In Disarm mode, all alarm procedure will be terminated, If Arm/Disarm SMS switch is on, the preset phone will receive SMS “System Stay Armed! “.If alarm host learned alarming leakage smart plug, the plug will switch off.

SOS

By remote control：press【SOS】button on the remote control.

By keyboard：Press SOS on the main interface of the alarm host.

By APP：Select”SOS”icon in the main menu for alarming.

The alarm host reminder: The Main Interface displays **“Panic alarm”**. The alarm host will generate a sound alarm, and send alarm SMS or make calling to the preset phone numbers , simultaneously send the alarm message to mobile phone APP or GPRS alarm center.

Confirm the operation result by SMS

<The alarm host name>:
The result of remote operation

Alarm & remote monitoring

This host support several alarm types, when alarm occurs, will send the SMS messages which include the detector name and the alarm number to the mobile phone users , push the alarm information to mobile app, send the alarm SMS to network alarm center, and dial the phone number at the same time, user can do field monitoring and remote control after connected.

below type alarms also be supported

- ☑ AC Power Failure(alarm still be valid within 5 seconds if the AC power failure).
- ☑ Backup battery low power(when the main power failure, alarm still be valid if the backup batter voltage lower than 3.45V and lasting 10 seconds).
- ☑ Main power Restored.

SMS alarm

Alarm occurred, host will send SMS manger to the preset phone numbers,should be as below.

<Host Name>: Current alert! Prevent Zone : xx

Voice alarm & remote monitoring

Auto dial number setting

When alarm occurred, host will dial the preset phone numbers. (dial switch should be opened), after user answered, host will displays the current alarm type first, if there is a default recording, it will have voice notice "Press 1 is arm, Press 2 is disarm, Press 3 to monitor, Press 4 to talk". If find the misinformation by user, press 2 to disarm and end the alarm progress. Users can also press 3 to close the scene alarm .Just hang up the phone without monitor.
If the user fails to answer or dial-up fails, host will re-press as reset times till the user answers.

Answer the alarm phone automatically

When the preset number call the alarm host, host will switched on automatically, and then the host can monitor the site or control the host according to the voice prompt.

Mobile app alarm recieving procedure

When there is alert, host will push alarm information to the cell phone first, user opening the APP and entering the main menu, APP intermediate state icon will display a red alarm ICONS, and display of the current alert type. The user can select the "Alarm information" "Alarm Log" icon to query all user operation records and host Alarm records pushed to the phone.

Networking alarm recieving procedure

When alarm occurs, host swill send the alarm message to the network monitoring center via the GPRS .The emergency response can be handled quickly after the central police have responded to the alarm.
This function will only be effective after the host has opened the user network alarm function and service.)

The IP address must be set up using SMS, and this function will be effective. APN must also be set in foreign or other areas.as for this two settings method, please see SMS message setting parameters).

Technical parameter

- Input Voltage: DC5V(micro USB standard connector supply)
- Operating current: screen off<120mA, screen on<200mA
- Standby current：<80uA
- Siren output：<500mA
- Wireless Frequency：315/433/868/915Mhz
- Wireless code：eV1527
- GSM system：850/900/1800/1900MHz
- WIFI system：IEEE802.11b/g/n wireless standard
- Spare battery：3.7V/1000mAh Li battery
- Operating temperature：-10~55℃
- Relative humidity：<80% (no condensation)
- Product size：160x98x18 (Length x Height x thickness)

Packing list

- 1 host with the spare battery
- Micro USB 5V/1000mA standard power supply
- Others as the customer OEM requirement.